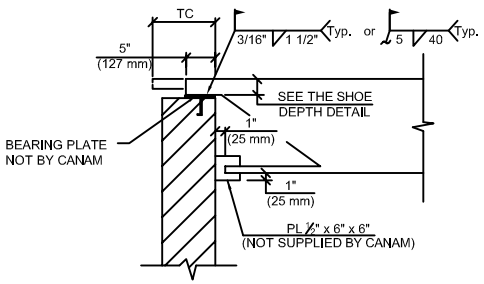

DO NOT WELD BOTTOM CHORD
TO STABILIZER PLATE

JOIST TYPE 17W

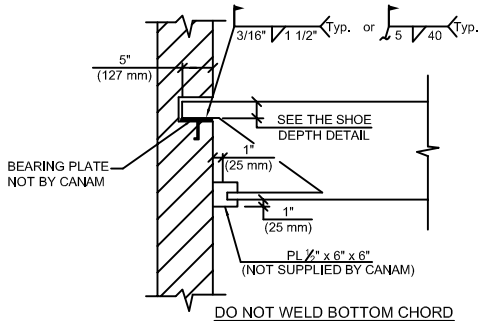

DO NOT WELD BOTTOM CHORD
TO STABILIZER PLATE

JOIST TYPE 17X

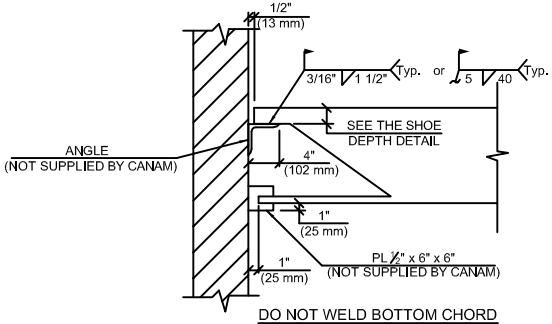

DO NOT WELD BOTTOM CHORD
TO STABILIZER PLATE

JOIST TYPE 18W

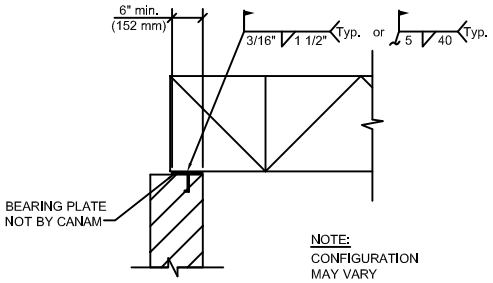

JOIST TYPE 19W

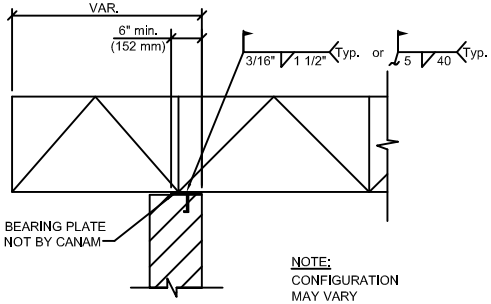

JOIST TYPE 19X